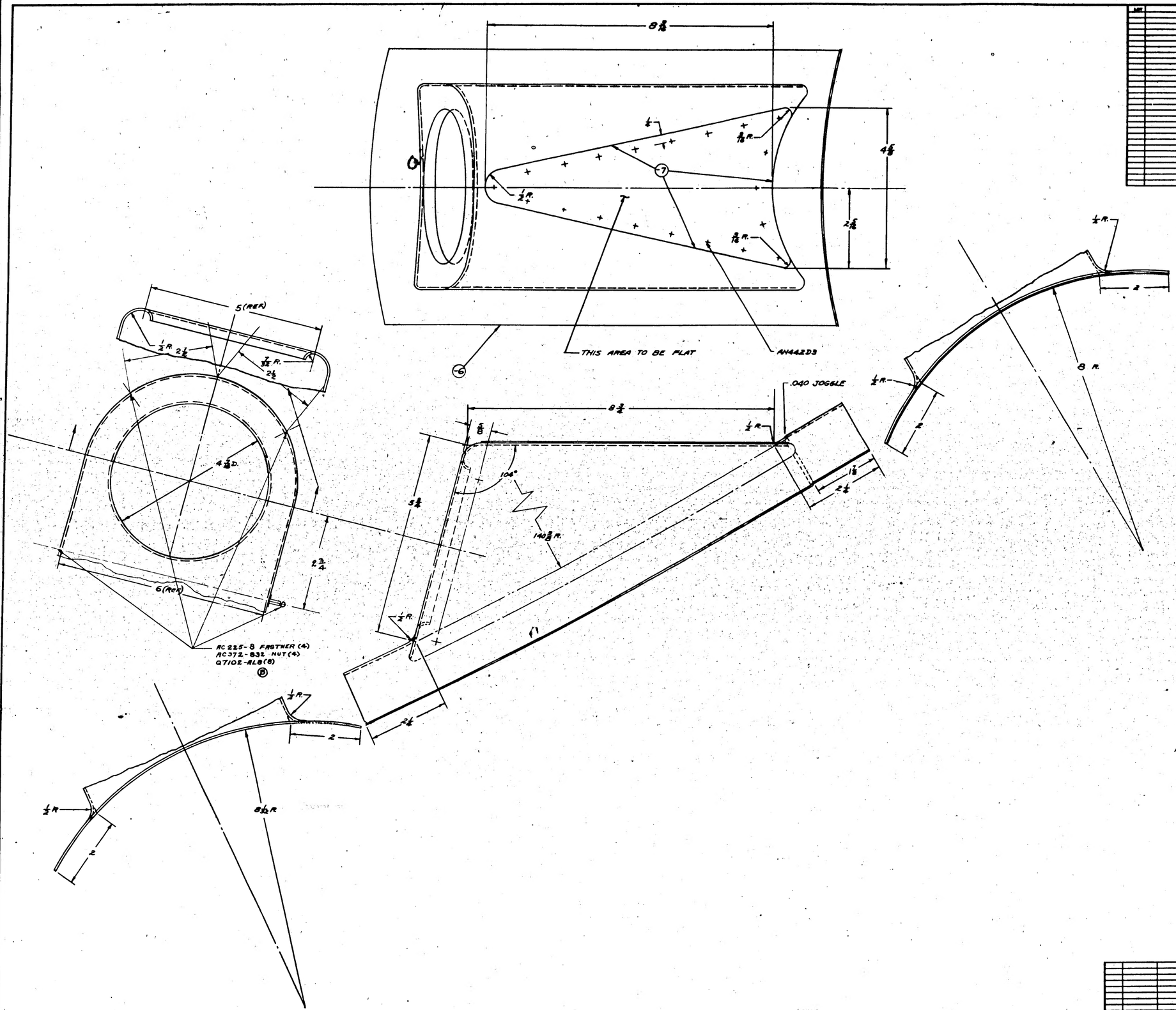

LET	ALTERATION	DATE	MADE	LET	ALTERATION	DATE	MADE
				B	BOSS 3/8 DIA. REMOVED 3/8 DIA. 7/8 DIA TO INSTALL 3/4 DIA. BOSS. BOSS & FASTENERS TO EACH SIDE		
						8-10-43	E.O. 8151-GA
				B	ADDED AC 372-832 NUT & Q7102-AL8 WASHER TO EACH SIDE OF BOSS & ADDED AC 225-7 SCREW & WASHERS.	10-9-43	

AC 225-8		4
AC 372-832		4
Q7102-AL8		8
ALTERATION		

PART NO.	SPECIFICATION	MATERIAL	SPECIFICATION	LH	RH	LH	RH	LH	RH	LH	RH
				REQ.		REQ.		REQ.		REQ.	
				-0		-2		-3		-4	
	PARTS LIST PER ASSY.										

A-0

SCALE			
WEIGHT			
SHEET TOTAL	FINISH	SHEET	

X-P-6P

WING FAIRED STEP-PLAN-SYMMETRICAL WITH-WING HEATER INTAKE DUCT

CONSOLIDATED AIRCRAFT CORP. SAN DIEGO, CALIF.

SIZE J

28F6723

R

OK OK 23(8)

H 391